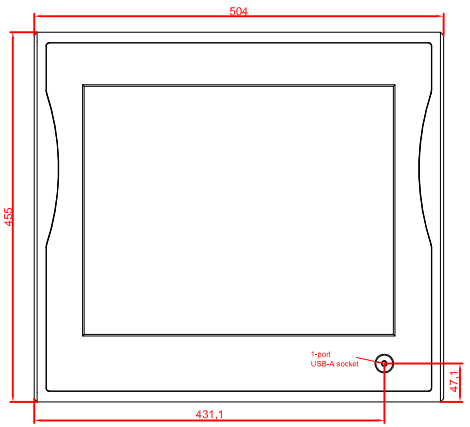

front view

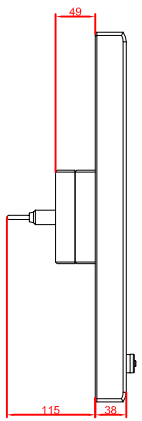

left view

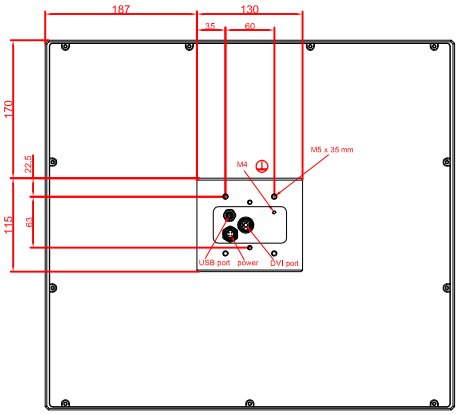

rear view

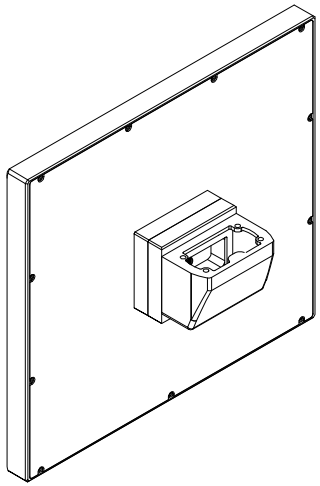

CP7803-0020-M235

connection-console
Rittal CP6508.020
Rittal CP6501.170

main dimensions and
fixing points

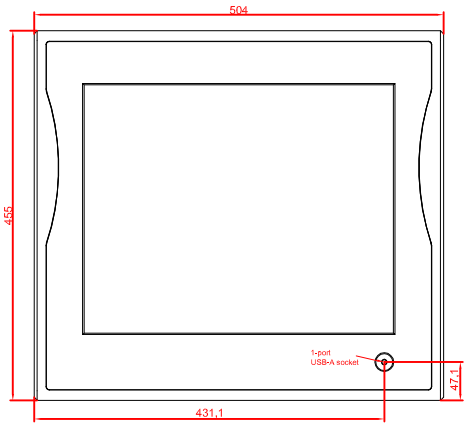

front view

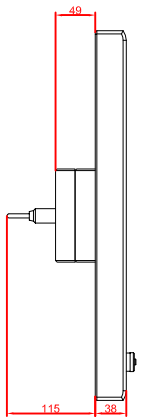

left view

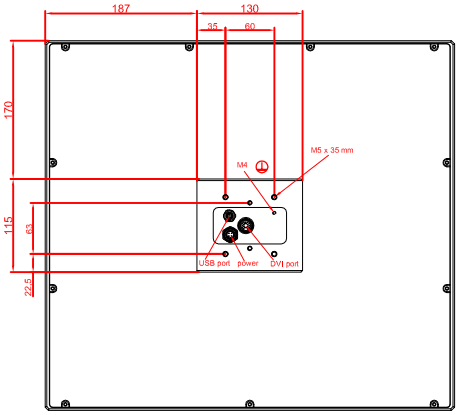
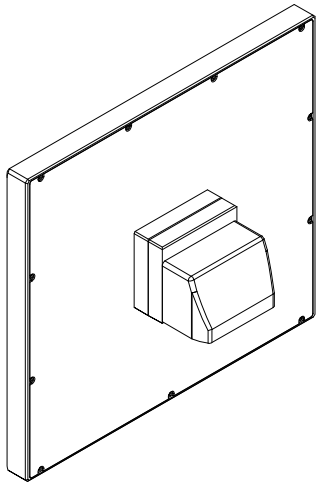
rear view