BECKHOFF New Automation Technology

Operating instructions | EN

AM8100

Synchronous servomotors for compact drive technology

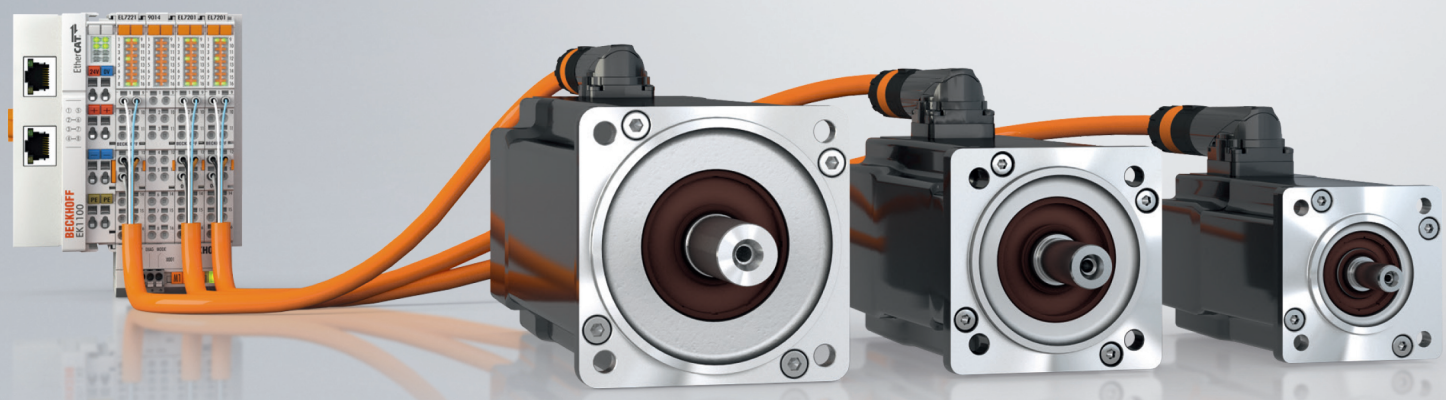

3/21/2022 | Version: 2.4

Table of contents

1 Foreword

1.1 Notes on the documentation

This description is only intended for the use of trained specialists in control and automation engineering who are familiar with applicable national standards.
It is essential that the documentation and the following notes and explanations are followed when installing and commissioning the components.
It is the duty of the technical personnel to use the documentation published at the respective time of each installation and commissioning.

The responsible staff must ensure that the application or use of the products described satisfy all the requirements for safety, including all the relevant laws, regulations, guidelines and standards.

Disclaimer

The documentation has been prepared with care. The products described are, however, constantly under development.
We reserve the right to revise and change the documentation at any time and without prior announcement.
No claims for the modification of products that have already been supplied may be made on the basis of the data, diagrams and descriptions in this documentation.

Trademarks

Beckhoff®, TwinCAT®, EtherCAT®, EtherCAT G®, EtherCAT G10®, EtherCAT P®, Safety over EtherCAT®, TwinSAFE®, XFC®, XTS® and XPlanar® are registered trademarks of and licensed by Beckhoff Automation GmbH.
Other designations used in this publication may be trademarks whose use by third parties for their own purposes could violate the rights of the owners.

Patent Pending

The EtherCAT Technology is covered, including but not limited to the following patent applications and patents:
EP1590927, EP1789857, EP1456722, EP2137893, DE102015105702
with corresponding applications or registrations in various other countries.

EtherCAT®

EtherCAT® is a registered trademark and patented technology, licensed by Beckhoff Automation GmbH, Germany

Copyright

1.2 Version numbers

Provision of revision levels

On request, you can obtain a list of revision levels for changes in the operating instructions.

- Send your request to: motion-documentation@beckhoff.de

Origin of the document

These operating instructions were originally written in German. All other languages are derived from the German original.

Product features

Only the product properties specified in the current operating instructions are valid. Further information given on the product pages of the Beckhoff homepage, in emails or in other publications is not authoritative.

1.3 Appropriate use

Synchronous servomotors of the AM8100 series are designed as drives for handling equipment, textile machines, machine tools, packaging machines and similar machines with demanding requirements in terms of dynamics. The motors of the AM8100 series are **exclusively** intended for speed- and/or torque-controlled operation via servo terminal EtherCAT EL72xx from Beckhoff Automation GmbH & Co. KG.

The thermal protection contact incorporated in the motor windings must be analysed and monitored.

⚠ CAUTION

Danger for persons, the environment or equipment

The motors are operated in the drive system in conjunction with Beckhoff servo terminal EtherCAT EL72xx. Please observe the entire documentation which consists of:

- AM8100 documentation (this Manual)
- Complete documentation (online and paper) for Beckhoff servo terminal EtherCAT EL72xx available at www.beckhoff.com.
- Complete machine documentation (provided by the machine manufacturer)

⚠ WARNING

Caution – Risk of injury!

Electronic equipment is not fail-safe. The machine manufacturer is responsible for ensuring that the connected motors and the machine are brought into a safe state in the event of a fault in the drive system.

Special safety instructions for AM8100!

The general safety instructions [▶ 8] and the special safety instructions for AM8100 [▶ 9] sections are also essential. Read carefully!

The servomotors from the AM8100 series are exclusively designed for installation as components in electrical systems or machines and may only be operated as integrated components of the system or machine.
The motors may **only** be operated under the ambient conditions defined in this documentation.

2 Guidelines and Standards

⚠ CAUTION

Danger for persons, the environment or equipment

Servomotors from the AM8100 series are **not** products within the meaning of the EC Machinery Directive. Operation of the servomotors in machines or systems is only permitted once the machine or system manufacturers has provided evidence of CE conformity of the complete machine or system.

2.1 EU conformity

Provision of EU Declaration of Conformity:

Beckhoff Automation GmbH & Co. KG will be glad to provide you with EU declarations of conformity and manufacturer's declarations for all products upon request to info@beckhoff.com.

3 Safety

3.1 Safety instructions

Safety regulations

Please note the following safety instructions and explanations!
Product-specific safety instructions can be found on following pages or in the areas mounting, wiring, commissioning etc.

Exclusion of liability

All the components are supplied in particular hardware and software configurations appropriate for the application. Modifications to hardware or software configurations other than those described in the documentation are not permitted, and nullify the liability of Beckhoff Automation GmbH & Co. KG.

Personnel qualification

This description is only intended for trained specialists in control, automation and drive engineering who are familiar with the applicable national standards.

Description of symbols

In this documentation the following symbols are used with an accompanying safety instruction or note. The safety instructions must be read carefully and followed without fail!

⚠ DANGER

Serious risk of injury!

Failure to follow the safety instructions associated with this symbol directly endangers the life and health of persons.

⚠ WARNING

Risk of injury!

Failure to follow the safety instructions associated with this symbol endangers the life and health of persons.

⚠ CAUTION

Personal injuries!

Failure to follow the safety instructions associated with this symbol can lead to injuries to persons.

NOTE

Damage to the environment or devices

Failure to follow the instructions associated with this symbol can lead to damage to the environment or equipment.

Tip or pointer

This symbol indicates information that contributes to better understanding.

UL pointer

This symbol indicates important information about the UL-compliant.

3.2 Special safety instructions for AM8100

The safety instructions are designed to avert danger and must be followed during installation, commissioning, production, troubleshooting, maintenance and trial or test assemblies.

The servomotors of the AM8100 series are not designed for stand-alone operation and are always installed in a machine or system. After installation the additional documentation and safety instructions provided by the machine manufacturer must be read and followed.

⚠ WARNING

Serious risk of injury through high electrical voltage!

- Never open the servomotor when it is live. Opening the device would invalidate any warranty and liability claims against Beckhoff Automation GmbH.
- It must be ensured that the protective conductor has been firmly connected.
- The machine manufacturer must prepare a hazard analysis for the machine, and must take appropriate measures to ensure that unexpected movements cannot lead to injury to persons or to objects.
- Before working on the AM8100 the servomotor must be disconnected from the servo terminal and secured against switching on again.

⚠ WARNING

Serious risk of injury through hot surfaces!

- The surface temperature may exceed 100 °C, resulting in a risk of burns.
- Avoid touching the housing during or shortly after operation.
- Leave the servomotor to cool down for at least 15 minutes after it is switched off.
- Use a thermometer to check whether the surface has cooled down sufficiently.

NOTE

Danger for persons, the environment or equipment

- Carefully read this manual before using the servomotor thoroughly, paying particular attention to the safety instructions. In the event of any uncertainties please notify your sales office immediately and refrain from working on the servomotor.
- Only well trained, qualified electricians with sound knowledge of drive equipment may work on the device.
- During installation it is essential to ensure that the specified ventilation clearances and climatic conditions are adhered to. Further information can be found in the technical data and mechanical installation sections.
- If a servomotor is installed in a machine it must not be commissioned until proof of compliance of the machine with the latest version of the EC Machinery Directive has been provided. This includes all relevant harmonised standards and regulations required for implementation of this Directive in national legislation.

4 Handling

4.1 Transport

- Climate category: 2K3 according to EN 60721
- Transport temperature: -25 °C - +70 °C, max. fluctuation 20 K/hour
- Transport humidity: relative humidity 5% - 95%, non-condensing
- The servomotor may only be transported by qualified personnel and in the manufacturer's original recyclable packaging.
- Avoid hard impacts, particularly at the shaft end.
- If the packaging is damaged, check the motor for visible damage. Inform the transport company and, if necessary, the manufacturer.

4.2 Packaging

- The max. stacking height by the servo motors AM8100 is 10 cardboard packaging.

4.3 Storage

- Climate category 2K3 according to EN 60721
- Storage temperature: -25 °C - +70 °C, max. fluctuation 20 K/hour
- Air humidity: relative humidity 5% - 95%, non-condensing
- Max. stacking height: see table Packaging
- Storage time: without limitation
- Store only in the manufacturer’s original recyclable packaging

4.4 Maintenance / Cleaning

- Maintenance and cleaning only by qualified personnel.
- The ball bearings have a grease filling with a service life of 30,000 hours under normal operating conditions. The bearings should be replaced after 30,000 hours of operation under rated conditions.
- Check the motor for bearing noise every 2,500 operating hours or once per year. If any noises are heard, stop the operation of the motor. The bearings must be replaced.
- In motors with **optional shaft seal ring** the ring must be lubricated every 5,000 hours. We recommend „Mobilgrease™ FM 222“ from Mobil.
- Opening the motor invalidates the warranty.
- Clean the housing with isopropanol or similar.
- Never immerse or spray the servomotor.

4.5 Disposal

In accordance with the WEEE 2012/19/EU Directives we take old devices and accessories back for professional disposal, provided the transport costs are taken over by the sender.

Send the devices with the note “For disposal” to:

Beckhoff Automation GmbH & Co. KG
Huelshorstweg 20
D-33415 Verl

5 Product overview

5.1 Scope of supply AM8100

Please check that the delivery includes the following items

- Motor from the AM8100 series
- Motor package leaflet (short info)

5.2 AM8100 name plate

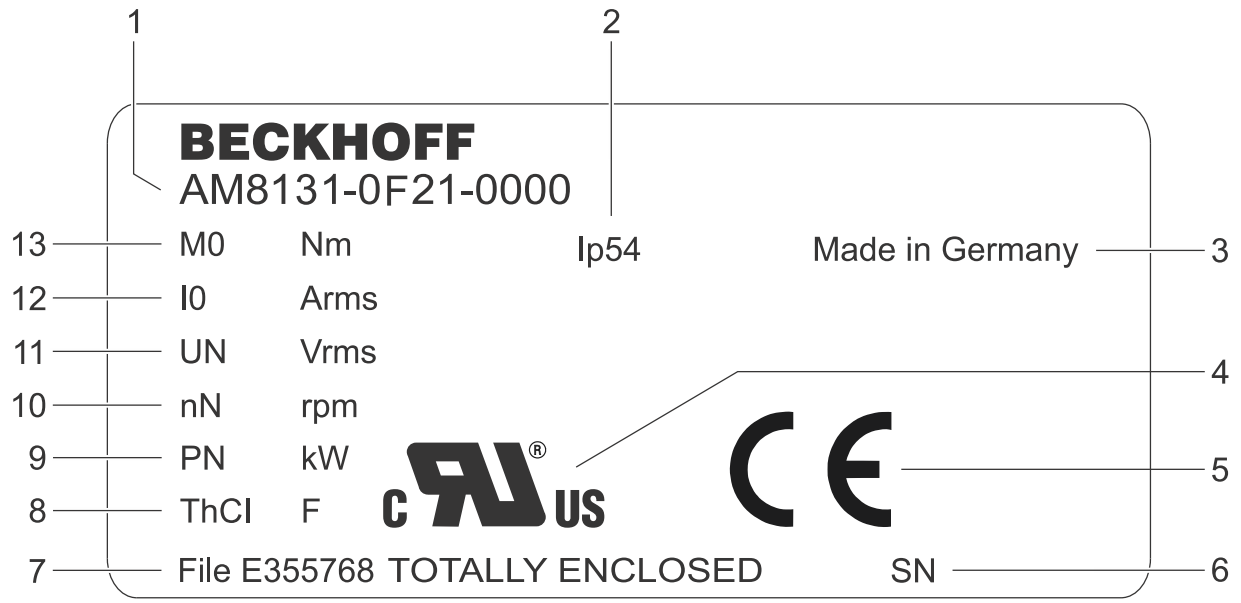

Number	Explanation
1	AM8100 servomotor (with order identifier)
2	Protection class specification
3	Designation of origin
4	cURus approval
5	CE certification
6	Serial number
7	cUR certification number (stating the E-number)
8	Insulation class
9	Power rating (given in W)
10	Nominal speed (given in rpm)
11	Rated voltage (given in Vms)
12	Standstill current (given in Ams)
13	Standstill torque (given in Nm)

5.3 Type key

AM81 u v – w x y z - 0 00 0	Explanation
AM81	Product area ◦ Synchronous servomotors for compact drive technology
u	Flange size ◦ 1 = 40 mm 2 = 58 mm 3 = 72 mm 4 = 87 mm
v	Overall length ◦ 1, 2, 3
w	Shaft version ◦ 0 = smooth shaft 1 = shaft with groove and feather key according to DIN 6885 2 = shaft with radial shaft-sealing ring IP 65 and smooth shaft; not with AM811x 3 = shaft with radial shaft-sealing ring IP 65, groove, feather key; not with AM811x 4 = shaft with radial shaft-sealing ring IP65 and sealing air connection; not with AM811x 5 = shaft with radial shaft-sealing ring IP65, groove and sealing air connection; not with AM811x
x	Winding type ◦ F = standard J = standard for EL7221 N = standard for ELM7231 S = special winding
y	Feedback system ◦ 0 = resolver, two-pole 1 = OCT single-turn 18-bit 2 = OCT multi-turn 18-bit G = OCT single-turn 24-bit, SIL 2 H = OCT multi-turn 24-bit, SIL 2
z	Holding brake ◦ 0 = no holding brake 1 = 24 V holding brake
0	Versions ◦ 0 = Standard 1 = special version
00	Not defined
0	Connection ◦ 0 = rotatable angular connector iTec or M23-Speedtec

5.3.1 Flange sizes

Motor sizes matching the adapter for gear unit mounting

Beckhoff flange size	AM3100	AM8000	AM8100
F1	AM311x	AM801x	AM811x
F2	-	AM802x	AM812x
Exception	AM312x	-	AM812x-xxxx-9
F3	-	AM803x	AM813x
F4	-	AM804x	AM814x

6 Technical description

6.1 Design of the motors

The synchronous servomotors of the AM8100 series are brushless three-phase motors for demanding servo-applications. In conjunction with our digital servo drives they are particularly suitable for positioning tasks in industrial robots, machine tools, transfer lines etc. with demanding requirements in terms of dynamics and stability.

The servo motors are equipped with permanent magnets in the rotor. This advanced neodymium magnetic material makes a significant contribution to the motors' exceptional dynamic properties. A three-phase winding is housed in the stator, and this is powered by the servo terminal. The motor has no brushes, the commutation being implemented electronically in the servo terminal.

The motors are available with or without built-in holding brake. The brake cannot be retrofitted.

The motors have a matt dark grey powder coating (similar to RAL 7016).The finish is not resistant against solvents (e.g. trichlorethylene, thinners or similar).

6.2 General technical data

Climate category	3K3 according to EN 60721
Ambient temperature (at rated values)	+5 - +40 °C for site altitudes up to 1000 m amsl
Permissible humidity (at rated values)	95% relative humidity, non-condensing
Power derating (currents and torques)	For site altitudes above 1000 m amsl and 40 °C
Ball bearing service life	≥30.000 operating hours
Technical data	→ see section --- FEHLENDER LINK ---
Storage and transport data	→ see section --- FEHLENDER LINK ---

6.2.1 Power derating

Ambient temperature

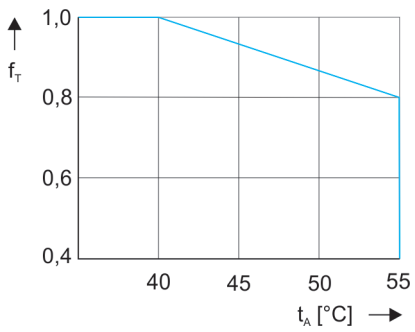

f_T = Temperature utilisation factor

t_A = Ambient temperature in °C

Calculation of the power data when exceeding the specified temperature limit > 40 °C up to 55 °C:

$\mathbf{M_{0\_red} = M_0 \times f_T}$

Installation altitude

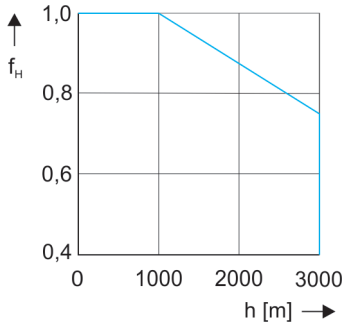

f_H = Altitude utilisation factor

h = Altitude in metres

Calculation of the power data when exceeding the specified installation altitude > 1000 m up to 3000 m:

$\mathbf{M_{0\_red} = M_0 \times f_H}$

Ambient temperature and installation altitude
Calculation of the power data when exceeding the specified limits:
Ambient temperature > 40 °C and installation altitude > 1000 m
$\mathbf{M_{0\_red} = M_0 \times f_T \times f_H}$

6.3 Standard features

6.3.1 Style

The basic style for the AM8100 synchronous servomotors is IM B5 according to DIN EN 60034-7.

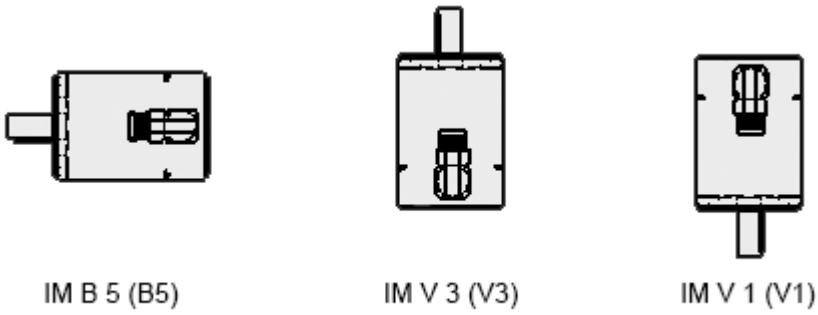

The permitted mounting positions are specified in the technical data.

NOTE

Motor damage

To avoid liquid entry damaging the motor, fluids (i.e. used for cleaning purposes) must be removed from shaft when motor is mounted according to IM V3.

6.3.2 Shaft end, A-side

The force transfer is friction-locked (backlash-free), via a clutch, via the cylindrical shaft end A, or optionally as a form-locking connection via a feather key groove according to DIN 6885. The bearings are designed for a service life of 30,000 hours.

Radial force
If the motors drive via pinions or toothed belts, then high radial forces will occur. Refer to the technical data for the permissible values at the shaft end, depending on the speed of rotation. Please use the program on our homepage for calculating the exact forces (www.beckhoff.com).

Axial force
Axial forces arise when assembling pinions or pulleys on the shaft and using right-angle gear units, for example. Please use the program on our homepage for calculating the exact forces (www.beckhoff.com).

Coupling
Double-coned collets, possibly in association with metal bellows couplings, have proven themselves as excellent, zero backlash coupling elements.

6.3.3 Flange

Flange dimensions according to IEC standard, fit j6 (h7 at AM811x), accuracy according to DIN 42955
Tolerance class: **N**

6.3.4 Shaft

Cylindrical shaft according to DIN 748 Part 3, center bore with thread (DIN 332 Part 2) for motors from the series AM811x, AM812x, AM813x and AM814x.

6.3.5 Protection class (EN 60034-5)

Standard version - housing	IP65 (IP54 = AM811x)
Standard version - shaft feedthrough	IP54
Shaft feedthrough with shaft sealing ring	IP65

6.3.6 Insulation material class

The motors conform to insulation material class F according to IEC 60085 (UL 1446 class F).

6.3.7 Vibration class

The motors are made to vibration class A according to DIN EN 60034-14. For a speed range of 600-3600 rpm and a shaft centre height between 54 - 97 mm, this means that the actual value of the permitted vibration severity is 1.6 mm/s.

Speed [rpm]	Max. rel. vibration displacement [µm]	Max. run-out [µm]
<= 1800	90	23
> 1800	65	16

6.3.8 Vibrations and shocks

OCT and Multiturn:
Vibration according to EN 60068-2-6 50 g / 10…2000 Hz
Shocks according to EN 60068-2-27 100 g / 6 ms

6.3.9 Connection technology

The motors are fitted with rotatable, angular connectors for the power supply and the feedback signals (only resolver).
The mating connectors are not included in the scope of supply. We can supply preassembled feedback (only resolver) and power cables.

6.3.10 Feedback system

Feedback system	Resolution	System accuracy		Comment
OCT, single-turn OCT, multi-turn	18-bit	± 120 angular sec.	approx. 0.03°	Standard
OCT, single-turn OCT, multi-turn	24-bit	± 25 angular sec.	approx. 0.0069	SIL 2
Resolver	14-bit	± 600 angular sec.	approx. 0.17°	**Option:** AM812x, AM813x and AM814x

Feedback exchange

The feedback system installed can only be replaced with an identical system. Retrofitting a different system is not possible.

6.3.11 Holding brake

The motors can be equipped as an option with permanent magnet holding brakes. These operate according to the quiescent current principle and open at a voltage of 24 V_{DC} +6 / -10 % with > 10,000,000 switching cycles.

The holding brake installed is not suitable for service braking because there is no monitoring for wear and functionality by the servo terminal and configuration. This applies in particular to vertical axes.

Safety measures for vertical axes must be applied

When operating vertical axes, appropriate additional measures must be taken; for example, including but not only:

- additional redundant brake units
- mechanical safeguards or interlocks
- attachment of a balancing weight

⇨ Permanent magnet holding brakes alone are not approved for the protection of persons. In consideration of ISO 13849-1 and 13849-2, additional precautions must be taken for personal protection.

⇨ If the voltage is interrupted by emergency stop or power failure, the holding brake is conditionally permissible as a service brake. You can perform a maximum of 2000 emergency stops from a maximum of 3000 rpm with a maximum of three times the intrinsic inertia of the motor. These maximum values may vary due to increased load inertia.

⇨ The function of the holding brake can be checked with a torque wrench or with TwinCAT Scope.

A holding brake blocks the rotor in the de-energized state. The holding brake increases the motor length and the rotor moment of inertia. The holding brake cannot be retrofitted and is mounted on the B bearing side of the motor.

6.3.12 Pole number

Motor	Pole number
AM811x	6
AM812x	6
AM813x	8
AM814x	8

6.4 Options

Holding brake
The holding brake is integrated in the motor. The holding brake increases the motor length and the rotor moment of inertia.

Radial shaft-sealing ring
Radial shaft-sealing ring (FKM) for sealing against splash water. This increases the protection class of the shaft feed through to IP65.

Feather key
The motors are available with feather key groove and inserted feather key according to DIN 6885. The rotor is balanced with half a feather key (according to DIN ISO 21940-32:2012-08).

OCT
A different feedback system is installed instead of the resolver.

Installation options and reduction of rated values

- With the exception of the sealing ring, the options cannot be retrofitted.
- The installation of a shaft seal ring leads to a reduction of the rated values.

6.5 Selection criteria

The three phase servomotors are designed for operation on the servo terminal.

Both units together form a speed or torque control loop.

The main selection criteria are:

• **Standstill torque**	**M0 [Nm]**
• **Maximum torque**	**Mmax [Nm]**
• **Rated speed at rated supply voltage**	**nn [rpm]**
• **Moment of inertia of motor and load**	**J [kgcm²]**
• **Effective torque (calculated)**	**Mrms [Nm]**

When calculating the required motors and servo terminals, observe the static load **and** the dynamic loads (acceleration/braking).

7 Mechanical installation

7.1 Important notes

NOTE

Motor damage

- Take care, especially during transport and handling that components are not bent and that insulation clearances are not altered.
- The site must be free of conductive and aggressive material. For V3-mounting (shaft end upwards), make sure that no liquids can enter the bearings. If an encapsulated assembly is required, please consult our applications department beforehand.
- Ensure unhindered ventilation of the motors and observe the permissible ambient and flange temperatures. For ambient temperatures above 40 °C please consult our applications department beforehand.
- Servomotors are precision devices.The flange and shaft are especially vulnerable during storage and assembly.It is important to use the locking thread which is provided to tighten up couplings, gear wheels or pulleys and warm up the drive components, where possible.Blows or the use of force will lead to damage to the ball bearings, shaft, holding brake and feedback System.

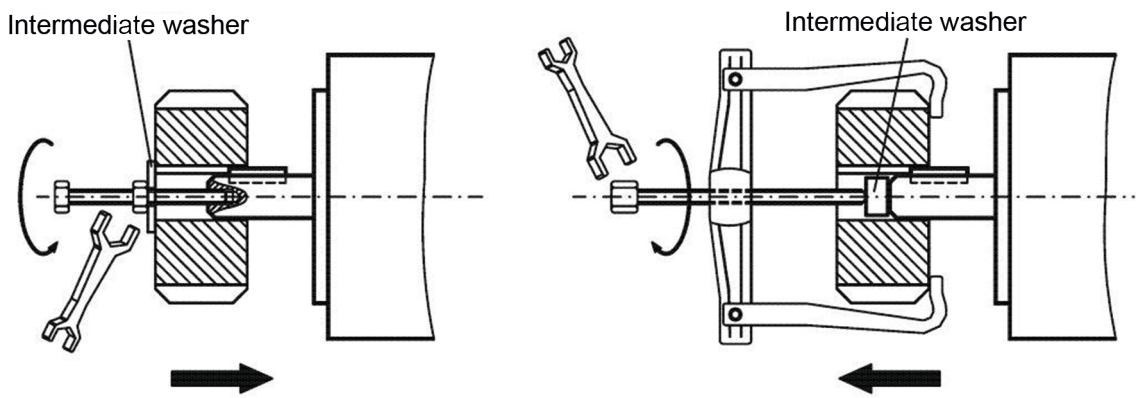

- Wherever possible, use only backlash-free, frictionally-locking collets or couplings. Ensure correct alignment of the couplings. A displacement will cause unacceptable vibration and the destruction of the ball bearings and the coupling.
- For toothed belts, it is vital to observe the permissible radial forces. An excessive radial load on the shaft will significantly shorten the life of the Motor.
- Avoid axial loads on the motor shaft, as far as possible. Axial loading significantly shortens the life of the Motor. Furthermore, it must be ensured that when using a collet, the motor shaft is degreased.
- In any case, avoid creating a mechanically constrained motor shaft mounting by using a rigid coupling with additional external bearings (e.g. in a gearbox).
- Take note of the no. of motor poles and the no. of resolver poles and ensure that the correct setting is made in the used servo terminals. An incorrect setting can lead to the destruction of the motor, especially with small Motors.
- Check compliance the permitted radial and axial loads F_R and F_A.When using a toothed belt drive, the **minimum** permitted diameter of the pinion follows from the equation:

$$d_{min} \geq \frac{M_0}{F_R} \times 2$$

7.2 Flange mounts

Information on correct flange-mounting of the motors is provided below.

Size	Bore diameter [mm]	Cheese-head screw DIN EN ISO 4762 (8.8)	Tightening torque [Nm]	Plain washer DIN EN ISO 7089
AM811x	4.3	M4 x 16	2.7	Washer M4 DIN 127
AM812x	5.5	M5x16	5.5	5.3
AM813x	6.0	M5x16	5.5	5.3
AM814x	7.0	M6x20	10.0	6.4

8 Electrical installation

8.1 Important notes

⚠ DANGER

Serious risk of injury through electric shock!

- Only staffs qualified and trained in electrical engineering are allowed to wire up the Motor.
  Check the assignment of the servo terminal and the motor.Compare the rated voltage and the rated current of the devices.
- Always make sure that the motors are de-energised during assembly and wiring, i.e. no voltage may be switched on for any piece of equipment which is to be connected. Ensure that the control cabinet remains turned off (barrier, warning signs etc.). The individual voltages will only be turned on again during commissioning.
- Never undo the electrical connections to the motor when it is live.
- Control and power leads may be live, even if the motor is not running.

NOTE

Failure free operation

- Ensure that the servo terminal and the motor are earthed properly.See below for further information regarding EMC shielding and earthing.Earth the mounting plate and motor housing.
- Only use cables approved by Beckhoff for operating the AM8100 with the “one-cable technology” (OCT).
- Route the power and control cables as separately as possible from one another (separation > 20 cm).This will improve the immunity of the system to electromagnetic interference.If a motor power cable is used which includes integral brake control leads, then these brake control leads must be shielded.The shielding must be connected at both ends (see sectionShielding concept)
- Install all cables carrying a heavy current with an adequate cross-section, as per EN 60204. The recommended cross-section can be found in the technical data.
- Wiring

  ⇨ Connect the feedback cable

  ⇨ Connect the motor cables

  ⇨ Connect shields to shield terminals or EMC connectors at both ends

  ⇨ Connect the motor holding brake

NOTE

HF interference

The ground symbol , which you will find in the wiring diagrams, indicates that you must provide an electrical connection, with as large a surface area as possible, between the unit indicated and the mounting plate in the control cabinet.This connection is to suppress HF interference and must not be confused with the PE (protective earth) symbol (protective measure according to EN 60204).

8.2 Connection technology

Beckhoff supplies prefabricated power and feedback cables. Mating connectors are not included in the scope of supply. For the selection of the necessary cables, refer to the Beckhoff documentation for the connecting cables. In the documentation you will find a complete overview of the available cables and information on the technical data.

For interference-free data transmission, please note:

- Maximum number of mating cycles for the connectors: 500 cycles
- Maximum number of rotations of the power box: 10

⇨ *If the maximum number of mating cycles or rotations is exceeded, clean data transmission can no longer be guaranteed. This results in signs of wear.*

8.2.1 Cables

NOTE

Avoid soiling and damage

When connecting the socket and connector, make sure that the poles and the inside of the component are not soiled or damaged.

Failure to do so may adversely affect the function of the connections.

Hint for trouble-free application and assembly:

- Wiring in accordance with applicable regulations and standards
- Pre-assembled and shielded Beckhoff cables

Beckhoff offers pre-assembled cables for faster and flawless installation of the motors. These cables are tested with regard to the material used, shielding and connection type. Perfect functioning and compliance with legal regulations, such as EMC and UL, are guaranteed. The use of other cables can cause unexpected malfunctions and result in exclusion of warranty.

Choice of cable

Beckhoff motor cables and feedback cables differ from one another in the method of laying, the type of connection and the core cross-section. The table below shows the assignment of the different Beckhoff cables to the matching servomotors and servo terminals.

Motor cables for servo terminals

Servomotor	Servo terminal	Order key	Laying method
◦ AM8111	EL7201, EL7201-0010, EL7201-9014	ZK4704-0401-2xxx ZK4704-0421-2xxx ZK4704-0461-2xxx	Fixed installation Highly dynamic Torsion-capable
◦ AM8112, ◦ AM8113, ◦ AM8121, ◦ AM8122-wFyz	EL7211, EL7211-0010, EL7211-9014, EP7211-9034, EJ7211-0010, EJ9414	ZK4704-0401-2xxx ZK4704-0421-2xxx ZK4704-0461-2xxx	Fixed installation Highly dynamic Torsion-capable
◦ AM8122-wJyz	EL7221-9014	ZK4704-0401-2xxx ZK4704-0421-2xxx ZK4704-0461-2xxx	Fixed installation Highly dynamic Torsion-capable
◦ AM8131-wFyz	EL7211, EL7211-0010, EL7211-9014, EP7211-9034, EJ7211-0010, EJ9414	ZK4704-0401-2xxx ZK4704-0421-2xxx ZK4704-0461-2xxx	Fixed installation Highly dynamic Torsion-capable
◦ AM8131-wJyz, ◦ AM8132, ◦ AM8141	EL7221-9014	ZK4704-0401-2xxx ZK4704-0421-2xxx ZK4704-0461-2xxx	Fixed installation Highly dynamic Torsion-capable

Servomotor	Servo terminal	Order key	Laying method
◦ AM8122-wNyz, ◦ AM8123-wNyz, ◦ AM8131-wNyz, ◦ AM8132-wNyz, ◦ AM8133-wNyz, ◦ AM8141-wNyz, ◦ AM8142-wNyz	ELM7231-9016, ELM7231-9018	ZK4704-0404-2xxx ZK4704-0424-2xxx	Fixed installation Highly dynamic

Feedback cables

Servomotor	Order key	Laying method
◦ AM811x, ◦ AM812x, ◦ AM813x, ◦ AM814x	ZK4724-0410-2xxx	dynamic

8.2.2 Connectors

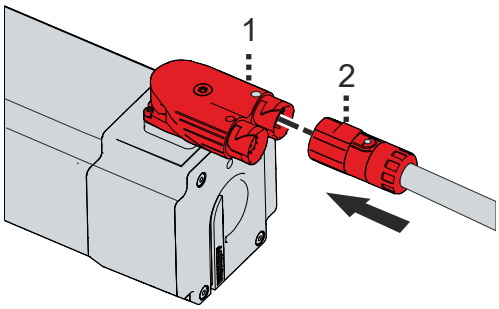

1. Push the iTec connector [2] straight into the motor power socket [1]
2. Make sure that the marking points face each other

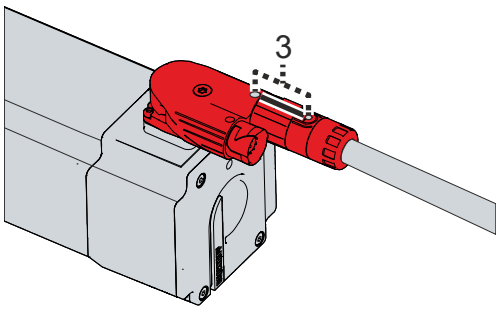

3. Pay attention to the "click" sound
4. Make sure that all marking points [3] are in alignment

The iTec connector is then fully engaged.

Important

If the iTec connector does not automatically lock into place on the power box during the rotational movement:

5. Turn the iTec connector by hand into the correct position so that the marking points [3] are aligned

8.3 Pin assignment

Beckhoff offers various power connectors and feedback connectors. All plugs are IP65 rated. A protective conductor connection according to VDE 0627 is provided on the housing.

8.3.1 OneCableTechnology

The following tables show the connector assignment:

iTec® plug

Pin assignment of iTec® plug			
iTec connector	**Contact**	**Function**	**Core identification**
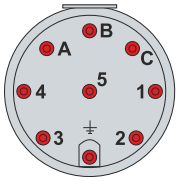	A	U	Black/1
	B	W	Black/3
	C	V	Black/2
	1	Brake+	5
	2	Brake-	6
	3	OCT+	White
	4	OCT-	Blue
	5	---	---
	PE	PE	Green/yellow

M23 Speedtec® plug

Pin assignment of M23 Speedtec® plug			
M23 connector	**Contact**	**Function**	**Core identification**
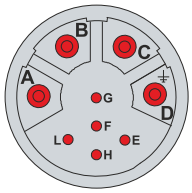	A	U	Black/1
	B	V	Black/2
	C	W	Black/3
	D	PE	Green/yellow
	E	OCT-	Blue
	F	Shield	Shield
	G	Brake+	Black/5
	H	OCT+	White
	L	Brake-	Black/6

8.3.2 Feedback

The following tables show the connector assignment:

Resolver

Pin assignment of M12 plug, 8-pin			
Resolver connector	**Contact**	**Function**	**Core identification**
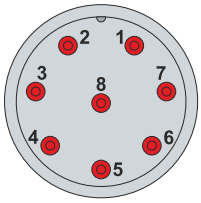	1	SIN+	white
	2	SIN-	brown
	3	COS+	green
	4	COS-	yellow
	5	REF+	gray
	6	REF-	pink
	7	---	---
	8	---	---

8.4 Shielding concept

Together with the shield busbar, the prefabricated cables from Beckhoff offer optimum protection against electromagnetic interference.

Connection of the motor cable to the shield busbar

Fasten the shield busbar supports (1) to the DIN rail (2). The DIN rail (2) must be in contact with the metallic rear wall of the control cabinet over a wide area. Push the PE clip (3) over the shield busbar (4) and press the shield busbar (4) into the receptacles of the shield busbar supports (1).

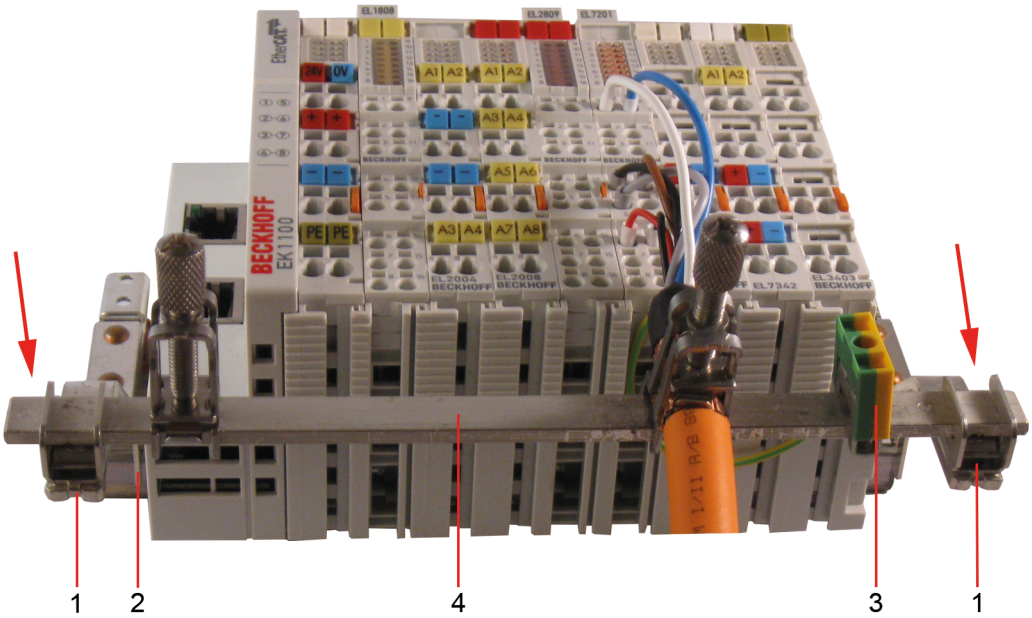

Connect the cores (5) of the motor cable (6) and then fasten the copper-sheathed end (7) of the motor cable (6) to the shield busbar (4) using the shield clamp (8). Tighten the screw (9) to the stop.

Connect all wires for the feedback system (14).

Secure the PE core (10) of the motor cable (6) under the PE clip (11) and securely tighten the screw (12) of the PE clip. Move the indicator bracket (13) into the vertical position and lock it.

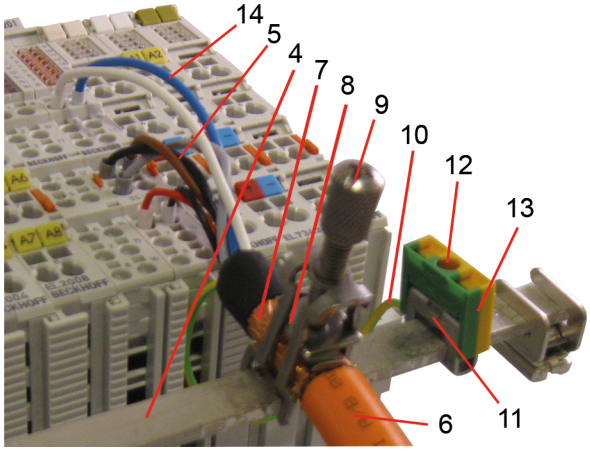

9 Comissioning

9.1 Important notes

⚠ DANGER

Serious risk of injury!

- Only specialist personnel with extensive knowledge in the areas of electrical engineering / drive technology are allowed to install and commission the Equipment.
- Check that all live connection points are protected against accidental contact.
- Never undo the electrical connections to the motor when it is live.
- The surface temperature of the motor can exceed 100 °C in operation. Check (measure) the temperature of the motor. Wait until the motor has cooled down below 40 °C before touching it.
- • Make sure that, even if the drive starts to move unintentionally, no danger can result for personnel or machinery.

9.2 Guide for commissioning

The procedure for commissioning is described as an example.

A different method may be appropriate or necessary, depending on the application of the Equipment.

- Check the assembly and orientation of the Motor.
- Check the drive components (coupling, gear unit, pulley) for the correct seating and setting (observe the permissible radial and axial forces).
- Check the wiring and connections to the motor and the servo terminal. Check that the earthing is correct.
- Test the function of the holding brake, if used. (apply 24 V_{DC}, the brake must be released).
- Check whether the rotor of the motor revolves freely (release the brake, if necessary). Listen out for grinding noises.
- Check that all the required measures against accidental contact with live and moving parts have been carried out.
- Carry out any further tests which are specifically required for your System.
- Now commission the drive according to the commissioning instructions for the servo terminal.
- In multi-axis systems, individually commission each drive unit (servo terminal/motor(s)).

9.3 Troubleshooting

The following table is to be seen as a “First Aid” box. There can be a large number of different reasons for a fault, depending on the particular conditions in your system. The fault causes described below are mostly those which directly influence the motor. Peculiarities which show up in the control behaviour can usually be traced back to an error in the parameterisation of the servo terminal. Please refer to the documentation for the servo terminal and the commissioning software.

For multi-axis systems there may be further hidden reasons for faults.

Our applications department can give you further help with your problems.

Error	Possible cause	Measures to remove the cause of the fault
Motor doesn’t rotate	Servo terminal not enabled	Supply ENABLE signal
	Break in setpoint lead	Check setpoint lead
	Motor phases in wrong sequence	Correct the phase sequence
	Brake not released	Check brake control
	Drive is mechanically blocked	Check mechanism
Motor runs away	Motor phases in wrong sequence	Correct the phase sequence
Motor oscillates	Break in the shielding of the feedback cable	Replace feedback cable
	Amplification to high	Use motor default values
Error message: brake	Short-circuit in the supply voltage lead to the motor holding brake	Remove the short circuit
	Voltage too low	Increase the voltage
	Faulty motor holding brake	Replace motor
Error message: output stage fault	Motor cable has short circuit or earth leakage	Replace motor cable
	Motor has short circuit or earth leakage	Replace motor
Error message: feedback	Connector is not properly plugged in	Check the plug connector
	Break in cable, cable crushed or similar	Check cables
	Internal error	Reading of error messages from OCT feedback
Brake does not grip	Required holding torque too high	Check the design
	Brake faulty	Replace motor

10 Technical data

All data, with the exception of the voltage constant, are based on 40 °C ambient temperature and 100 K overtemperature of the winding. The data can have a tolerance of +/- 10%.
If a gear unit is attached the power may be reduced by up to 20 %. This loss in performance has thermal reasons, since a gear unit that is subject to warming is installed at the motor flange intended for heat dissipation.

Term definitions

Standstill torque M0 [Nm]
The standstill torque can be maintained indefinitely at a speed n<100 rpm and rated ambient conditions.

Rated torque Mn [Nm]
The rated torque is produced when the motor is drawing the rated current at the rated speed.
The rated torque can be produced indefinitely at the rated speed in continuous operation (S1).

Rated speed nn [rpm]
At the rated speed motor output corresponds to the rated torque and the rated output. The rated speed depends on the supply voltage. The example below refers to supply voltages of 24 and 48 VDC. The supply voltages are specified without tolerances.

Standstill current I0rms [A]
The standstill current is the effective sinusoidal current which the motor draws at n<100 rpm to produce the standstill torque.

Peak current (pulse current) I0max [A]
The peak current (effective sinusoidal value) is approximately equivalent to 5-times the rated standstill current. The configured peak current of the servo terminal in use must be lower.

Torque constant KTrms [Nm/A]
The torque constant indicates how much torque in Nm is generated by the motor with standstill current. The rule is $M_0 = I_0 \times K_T$

Voltage constant KErms [mVmin]
At 20 °C, the voltage constant indicates the induced motor EMF, referenced to 1000 rpm, as an effective sine value between two terminals.

Rotor moment of inertia J [kgcm²]
The constant J is a measure of the acceleration capability of the motor. For instance, at I_0 the acceleration time t_b from 0 to 3000 rpm is given as:

$$t_b\,[S] = \frac{3000 \times 2\pi}{M_0 \times 60s} \times \frac{m^2}{10^4\ cm^2} \times J$$ with M_0 in Nm and J in $kgcm^2$

Thermal time constant tTH [min]
The constant t_{TH} defines the time for the cold motor, under a load of I_0 to heat up to an overtemperature of 0.63 x 100 Kelvin.
This temperature rise happens in a much shorter time when the motor is loaded with the peak current.

Release delay time tBRH [ms] / Application delay time tBRL [ms] of the brake
These constants define the response times of the stopping brake when operated with the rated voltage at the servo terminal.

Winding inductance L [mH]
The winding inductance is the specification of the motor inductance as an average value over one revolution of the motor, on two powered phases at 1 kHz, taking into account the saturation of the motor.

10.1 AM811x

Electrical data	AM81xx		
	11F	12F	13F
◦ Standstill torque M_0 [Nm]	0.20	0.38	0.52
◦ Standstill current I_{orms} [A]	2.85	4.7	4.8
◦ Maximum mechanical speed N_{max} [min^{-1}]	10000	10000	10000
◦ Maximum rated mains voltage U_N [V_{AC}]	50	50	50
◦ Peak current I_{0max} [A]	8.6	16.5	18.0
◦ Peak torque M_{0max} [Nm]	0.68	1.36	2.04
◦ Torque constant K_{Trms} [Nm/A]	0.070	0.080	0.108
◦ Voltage constant K_{Erms} [mVmin]	5	5	7
◦ Winding resistance Ph-Ph R_{20} [Ω]	2.30	1.20	1.38
◦ Winding inductance Ph-Ph, measured at 1 kHz L [mH]	1.50	0.79	0.97
Power supply U_N= 24 V DC			
◦ Nominal speed Nn [min-1]	1700	1700	1200
◦ Rated torque M_n [Nm]	0.20	0.38	0.52
◦ Power rating P_n [W]	36	68	65
Power supply U_N= 48 V DC			
◦ Nominal speed Nn [min-1]	4000	4500	3000
◦ Rated torque M_n [Nm]	0.19	0.36	0.50
◦ Power rating P_n [W]	80	170	160
◦ Nominal current In [A]	2.71	4.5	4.65
Connection technology	iTec	iTec	iTec
Reference flange aluminum 230 mm x 130 mm x 10 mm			

Mechanical data	AM81xx		
	11	12	13
◦ Rotor moment of inertia J [kgcm^2]	0.0294	0.0482	0.0670
◦ Rotor moment of inertia with brake J [kgcm^2]	0.0521	0.0709	0.0897
◦ Number of poles	6		
◦ Static friction torque M_R [Nm]	0.0009	0.0018	0.0027
◦ Thermal time constant t_{TH} [min]	9	9	10
◦ Weight [kg]	0.55	0.67	0.79
◦ Weight with brake [kg]	0.74	0.86	0.98
Flange			
◦ Fit	j6		
◦ Tolerance class	N		
Protection class			
◦ Standard housing version	IP54		
◦ Standard shaft feed through version	IP54		
Paint finishes			
◦ Properties	acrylic powder-coated		
◦ Hue	Anthracite gray; RAL 7016		

Optional holding brake [+]	AM811x
◦ Holding torque at 120 °C M_{BR} [Nm]	0.6
◦ Supply voltage U_{BR} [V_{DC}]	24 +6 -10%
◦ Electrical power P_{BR} [W]	10
◦ Current at 120 °C I_{on} [A]	0.3
◦ Release delay time t_{BRH} [ms]	14
◦ Application delay time t_{BRL} [ms]	8

10.1.1 Dimensional drawing

- All figures in millimeters

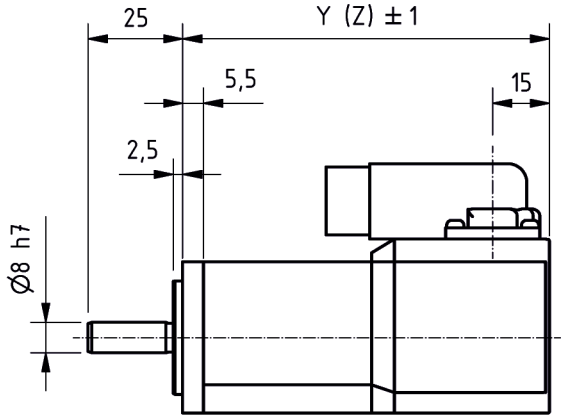

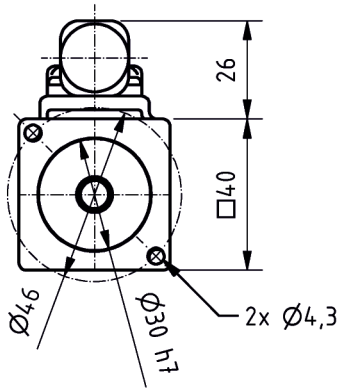

Motor type	Y	Z (Brake)
AM8111	97	129
AM8112	117	149
AM8113	137	169

Option: Feather key

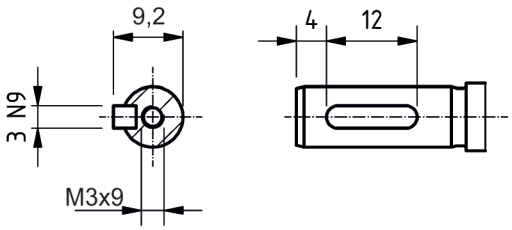

10.1.2 Force diagram

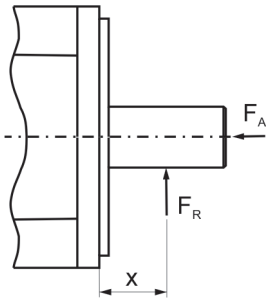

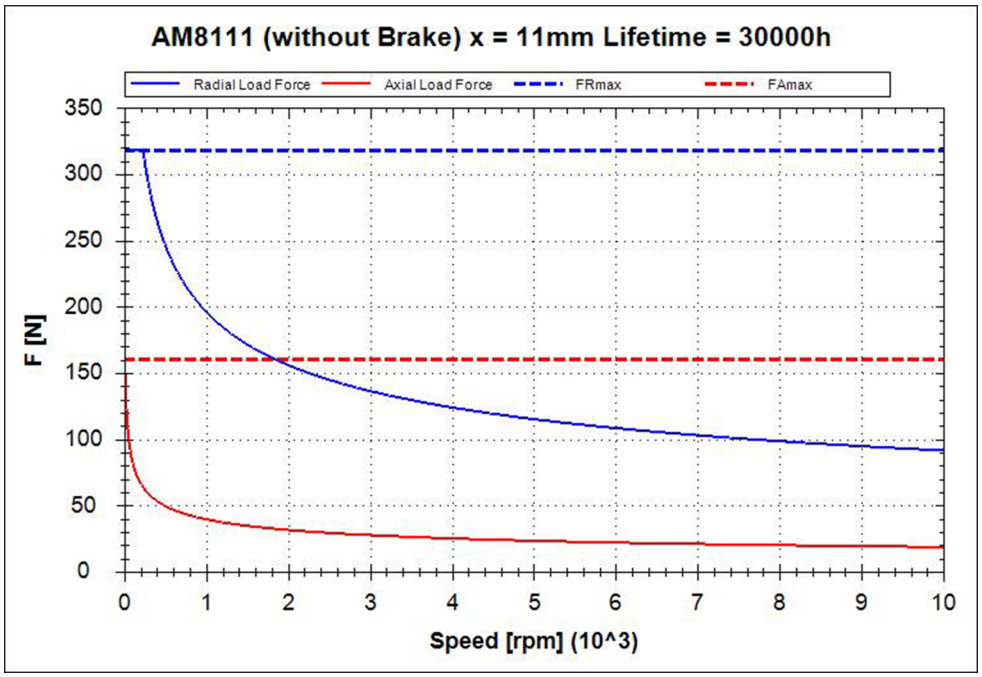

10.2 AM812x

Electrical data	AM81xx						
	21F	21F on EL7201	22F	22F on EL7201	22J	22N	23N
◦ Standstill torque M_0 [Nm]	0.5	0.35	0.8	0.56	0.8	0.8	1.2
◦ Standstill current I_{orms} [A]	4.0	2.8	4.0	2.8	8.0	13.5	15.3
◦ Maximum mechanical speed N_{max} [min^{-1}]	12000	12000	12000	12000	12000	12000	12000
◦ Maximum rated mains voltage U_N [V_{AC}]	50	50	50	50	50	50	50
◦ Peak current I_{0max} [A]	17	5.66	22.4	5.66	48	86.6	88.4
◦ Peak torque M_{0max} [Nm]	1.97	0.69	4.06	1.09	4.06	4.18	6.37
◦ Torque constant K_{Trms} [Nm/A]	0.125	0.125	0.2	0.2	0.1	0.059	0.078
◦ Voltage constant K_{Erms} [mVmin]	8	8	13	13	6	3.5	5.5
◦ Winding resistance Ph-Ph R_{20} [Ω]	1.6	1.6	1.5	1.5	0.34	0.138	0.14
◦ Winding inductance Ph-Ph, measured at 1 kHz L [mH]	2.8	2.8	3.3	3.3	0.7	0.24	0.35
Power supply U_N= 24 V DC							
◦ Rated speed Nn [min-1]	1000	1000	600	600	2000	3500	2000
◦ Rated torque M_n [Nm]	0.5	0.35	0.8	0.56	0.78	0.75	1.2
◦ Power rating P_n [W]	52	36	50	35	163	275	251
Power supply U_N= 48 V DC							
◦ Rated speed Nn [min-1]	3000	3000	2000	2000	4500	8000	5000
◦ Rated torque M_n [Nm]	0.5	0.35	0.8	0.56	0.75	0.7	1.1
◦ Power rating P_n [W]	157	110	167	117	353	586	576
◦ Rated current In [A]	4	2.8	4	2.8	8	12.5	14.6
Connection technology	iTec	iTec	iTec	iTec	iTec	M23-Speedtec	M23-Speedtec
Reference flange aluminum 230 mm x 130 mm x 10 mm *Installation of a shaft seal ring leads to a reduction of the rated values.*							

Mechanical data	AM81xx		
	21	22	23
◦ Rotor moment of inertia J [kgcm^2]	0.134	0.26	0.38
◦ Rotor moment of inertia with brake J [kgcm^2]	0.204	0.33	0.45
◦ Number of poles	6		
◦ Static friction torque M_R [Nm]	0.002	0.004	0.006
◦ Thermal time constant t_{TH} [min]	10	13	16
◦ Weight [kg]	1.00	1.3	1.7
◦ Weight with brake [kg]	1.16	1.66	1.96
Flange			
◦ Fit	j6		
◦ Tolerance class	N		
Protection class			
◦ Standard housing version	IP54		
◦ Standard shaft feed through version	IP54		
Paint finishes			
◦ Properties	acrylic powder-coated		
◦ Color	Anthracite gray; RAL 7016		

Optional holding brake [+]	AM812x
◦ Holding torque at 120 °C M_{BR} [Nm]	2
◦ Supply voltage U_{BR} [V_{DC}]	24;+6 % to -10 %
◦ Electrical power P_{BR} [W]	10
◦ Current I_{on} [A]	0.3
◦ Release delay time t_{BRH} [ms]	25
◦ Application delay time t_{BRL} [ms]	8

10.2.1 Dimensional drawing

- All figures in millimeters
- Illustration with F winding and J winding

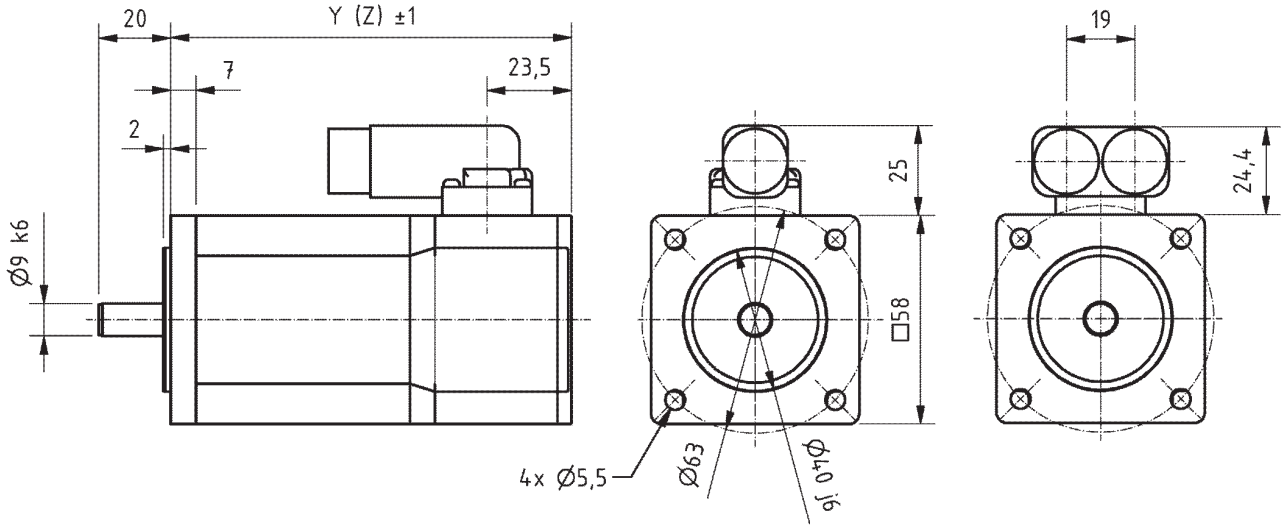

Option: Feather key

Motor type	Y	Z (Brake)
AM8121	111,5	146
AM8122	133,5	168

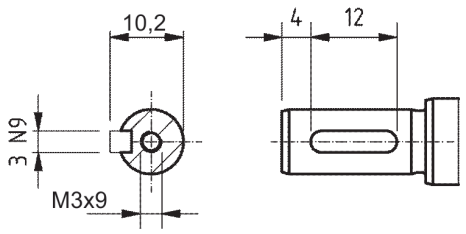

10.2.2 Dimensional drawing

- All figures in millimeters
- Illustration with N-winding

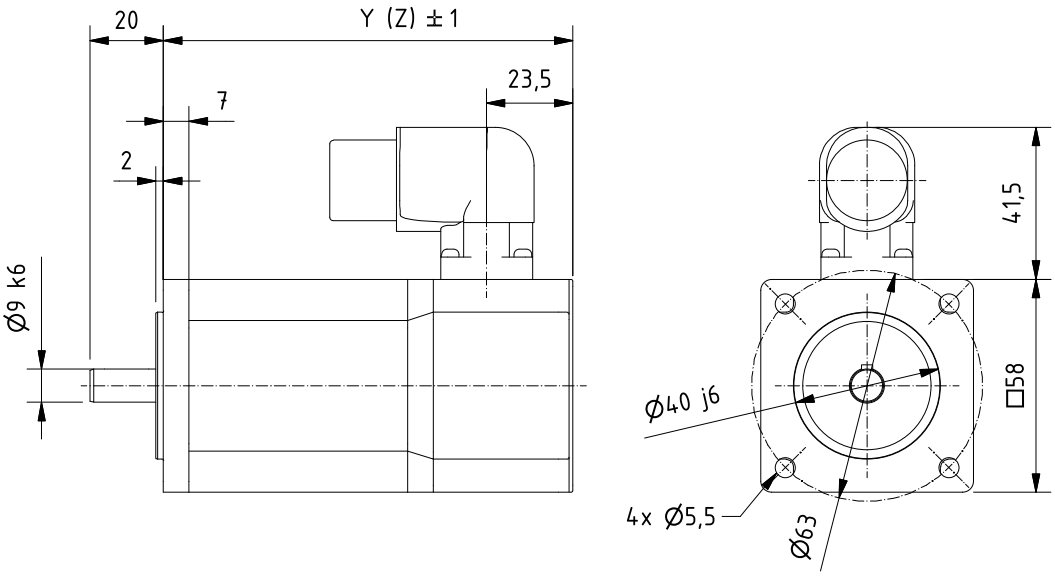

Motor	Y	Z - brake
AM8122	133.5	168
AM8123	155.5	190

Feather key

- Center bore according to DIN 332-D

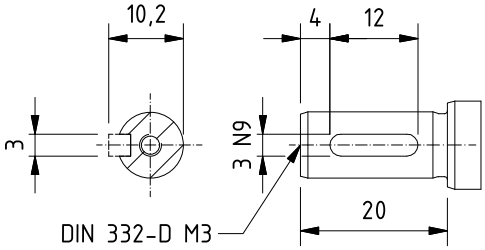

10.2.3 Force diagram

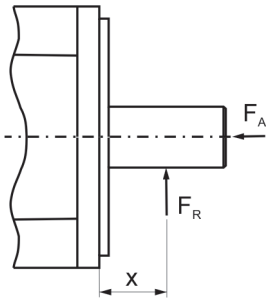

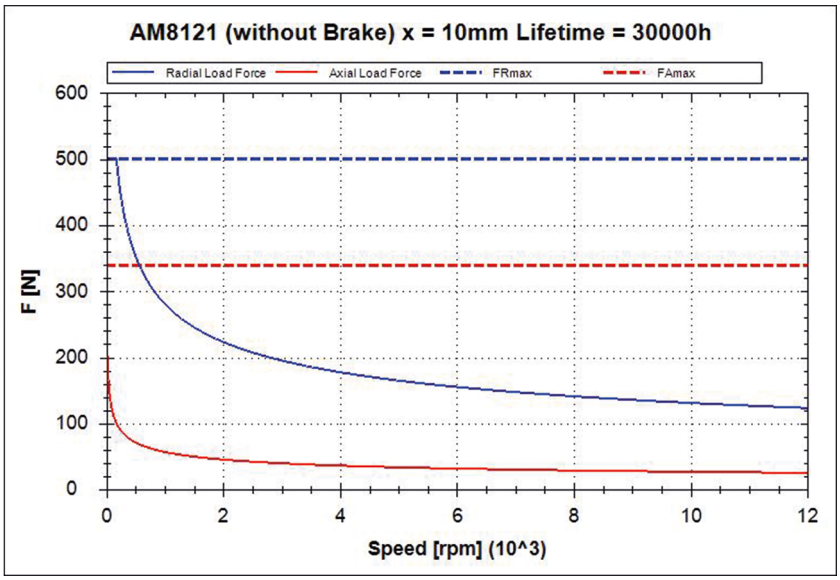

10.3 AM813x

Electrical data	AM81xx						
	31F	31F on EL7201	31J	31N	32J	32N	33N
◦ Standstill torque M_0 [Nm]	1.35	0.80	1.35	1.32	2.37	2.37	3.17
◦ Standstill current I_{orms} [A]	5.0	2.8	8.0	15.4	8.0	15.8	14.4
◦ Maximum mechanical speed N_{max} [min^{-1}]	10000	10000	10000	10000	10000	10000	10000
◦ Maximum rated mains voltage U_N [V_{AC}]	50	50	50	50	50	50	50
◦ Peak current I_{0max} [A]	27.8	5.66	44.7	89.4	44.3	96	98.4
◦ Peak torque M_{0max} [Nm]	6.07	1.76	6.07	6.07	11.7	11.7	17.7
◦ Torque constant K_{Trms} [Nm/A]	0.27	0.28	0.169	0.086	0.296	0.15	0.22
◦ Voltage constant K_{Erms} [mVmin]	19	19	11.8	6.1	21	10	14
◦ Winding resistance Ph-Ph R_{20} [Ω]	1.95	1.95	0.73	0.2	0.96	0.22	0.25
◦ Winding inductance Ph-Ph, measured at 1 kHz L [mH]	5.3	5.3	2.05	0.5	3.4	0.72	0.6
Power supply U_N= 24 V DC							
◦ Nominal speed Nn [min-1]	300	300	600	1800	300	1000	800
◦ Rated torque M_n [Nm]	1.35	0.80	1.35	1.3	2.36	2.33	3.1
◦ Power rating P_n [W]	28	25	94	245	74	244	260
Power supply U_N= 48 V DC							
◦ Nominal speed Nn [min-1]	1000	1000	1800	4000	1000	2500	2000
◦ Rated torque M_n [Nm]	1.35	0.80	1.34	1.28	2.35	2.3	2.96
◦ Power rating P_n [W]	140	84	253	536	246	602	620
◦ Nominal current In [A]	4.95	2.8	8	14.9	8	14.8	13.5
Connection technology	iTec	iTec	iTec	M23-Speedtec	iTec	M23-Speedtec	M23-Speedtec
Reference flange aluminum 230 mm x 130 mm x 10 mm *Installation of a shaft seal ring leads to a reduction of the rated values.*							

Mechanical data	AM81xx		
	31	32	33
◦ Rotor moment of inertia J [kgcm^2]	0.462	0.842	1.23
◦ Rotor moment of inertia with brake J [kgcm^2]	0.541	0.921	1.46
◦ Number of poles	8		
◦ Static friction torque M_R [Nm]	0.009	0.009	0.02
◦ Thermal time constant t_{TH} [min]	24	24	28
◦ Weight [kg]	1.8	2.4	3
◦ Weight with brake [kg]	2.2	2.8	3.6
Flange			
◦ Fit	j6		
◦ Tolerance class	N		
Protection class			
◦ Standard housing version	IP54		
◦ Standard shaft feed through version	IP54		
Paint finishes			
◦ Properties	acrylic powder-coated		
◦ Hue	Anthracite gray; RAL 7016		

Optional holding brake [+]	AM8131 and AM8132	AM8133
◦ Holding torque at 120 °C M_{BR} [Nm]	2.0	3.5
◦ Supply voltage U_{BR} [V_{DC}]	24 V DC +6% to-10%	24 V DC +6% to-10%
◦ Electrical power P_{BR} [W]	11	12
◦ Current at 120 °C I_{on} [A]	0.33	0.36
◦ Release delay time t_{BRH} [ms]	25	25
◦ Application delay time t_{BRL} [ms]	8	15

10.3.1 Dimensional drawing

- All figures in millimeters
- Illustration with F winding and J winding

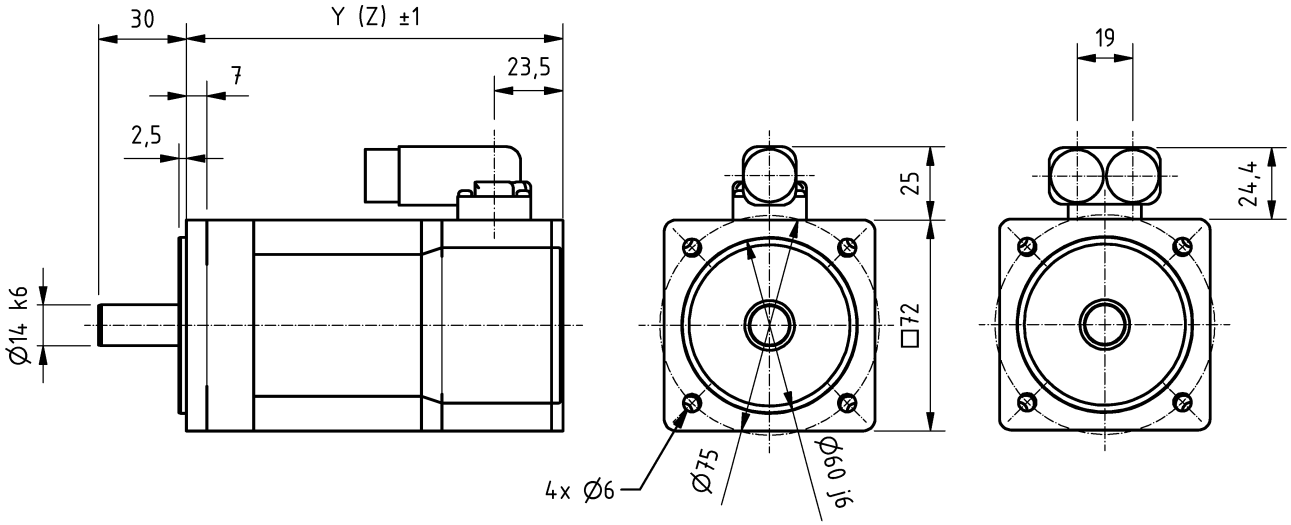

Motor type	Y	Z (Brake)
AM8131	129	168
AM8132	154	194

Option: Feather key

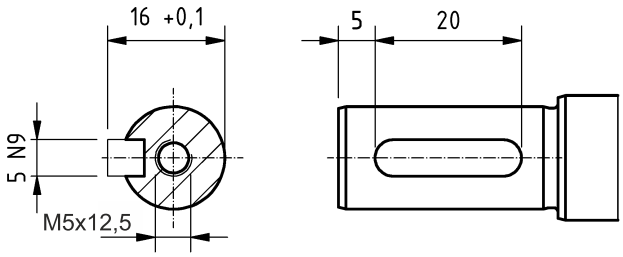

10.3.2 Dimensional drawing

- All figures in millimeters
- Illustration with N-winding

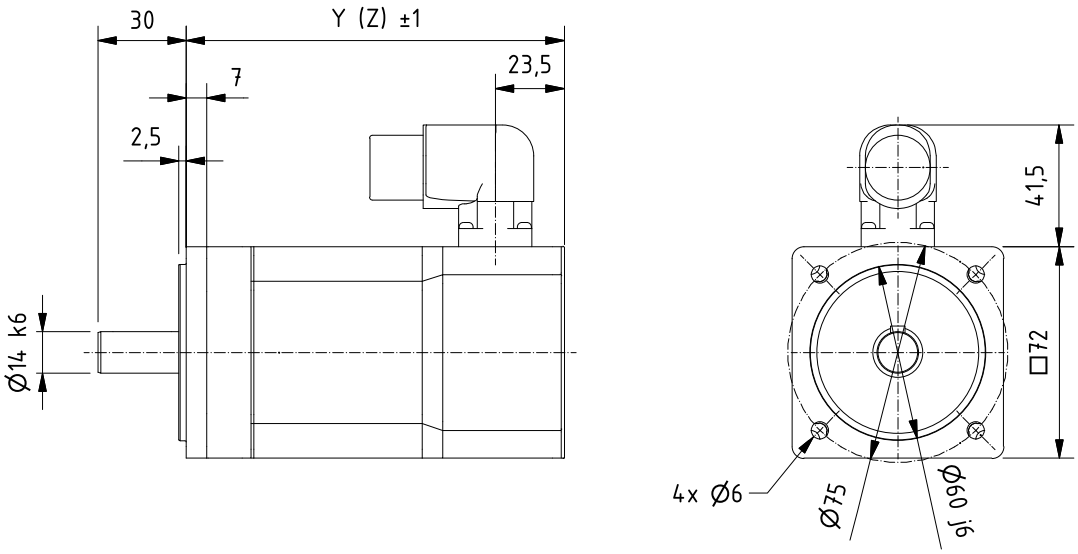

Motor	Y	Z - brake
AM8131	129	168
AM8132	154	194
AM8133	180	229

Feather key

- Center bore according to DIN 332-D

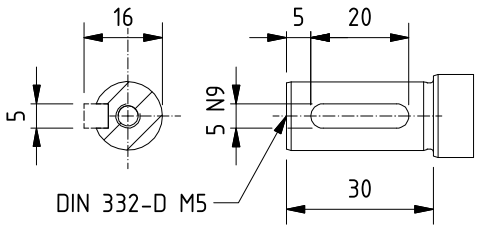

10.3.3 Force diagram

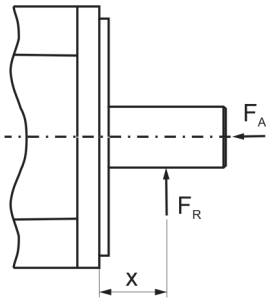

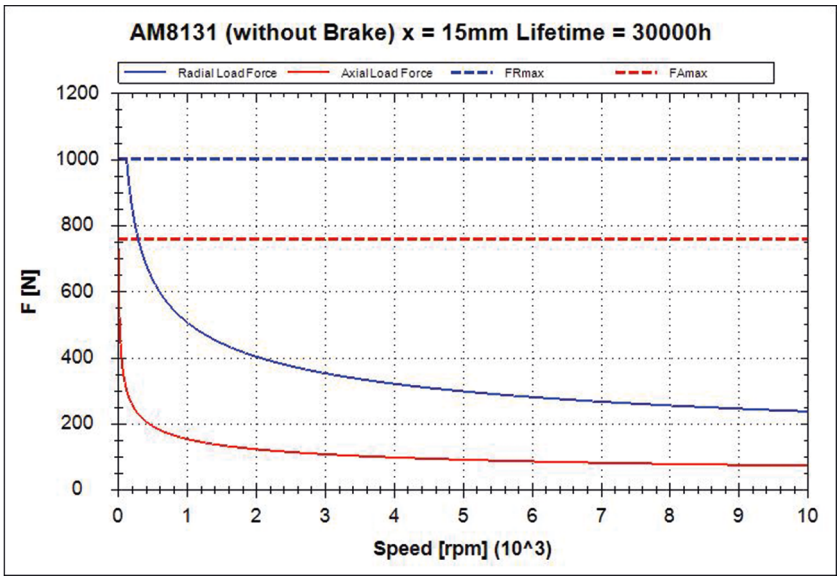

10.4 AM814x

Electrical data	AM81xx		
	41J	41N	42N
◦ Standstill torque M_0 [Nm]	2.4	2.4	3.9
◦ Standstill current I_{orms} [A]	8.0	15.6	15.1
◦ Maximum mechanical speed N_{max} [min^{-1}]	9000	9000	9000
◦ Maximum rated mains voltage U_N [V_{AC}]	50	50	50
◦ Peak current I_{0max} [A]	36.2	68.7	82.2
◦ Peak torque M_{0max} [Nm]	9.13	9.14	18.9
◦ Torque constant K_{Trms} [Nm/A]	0.3	0.154	0.258
◦ Voltage constant K_{Erms} [mVmin]	21	11	19
◦ Winding resistance Ph-Ph R_{20} [Ω]	0.9	0.25	0.28
◦ Winding inductance Ph-Ph, measured at 1 kHz L [mH]	3.5	0.97	1.32
Power supply U_N= 24 V DC			
◦ Nominal speed Nn [min-1]	300	1000	500
◦ Rated torque M_n [Nm]	2.4	2.4	3.9
◦ Power rating P_n [W]	75	251	204
Power supply U_N= 48 V DC			
◦ Nominal speed Nn [min-1]	1000	2500	1500
◦ Rated torque M_n [Nm]	2.4	2.37	3.9
◦ Power rating P_n [W]	250	620	613
◦ Nominal current In [A]	8	15.2	14.6
Connection technology	iTec	M23-Speedtec	M23-Speedtec
Reference flange aluminum 230 mm x 130 mm x 10 mm *Installation of a shaft seal ring leads to a reduction of the rated values.*			

Mechanical data	AM81xx	
	41	42
◦ Rotor moment of inertia J [kgcm^2]	1.08	1.98
◦ Rotor moment of inertia with brake J [kgcm^2]	1.73	2.63
◦ Number of poles	8	
◦ Static friction torque M_R [Nm]	0.02	0.02
◦ Thermal time constant t_{TH} [min]	30	33
◦ Weight [kg]	2.8	3.8
◦ Weight with brake [kg]	3.6	4.5
Flange		
◦ Fit	j6	
◦ Tolerance class	N	
Protection class		
◦ Standard housing version	IP65	
◦ Standard shaft feed through version	IP54	
Paint finishes		
◦ Properties	acrylic powder-coated	
◦ Hue	Anthracite gray; RAL 7016	

Optional holding brake [+]	AM8141-J	AM8141-N and AM8142-N
◦ Holding torque at 120 °C M_{BR} [Nm]	2.5	9
◦ Supply voltage U_{BR} [V_{DC}]	24 V DC +6% to-10%	
◦ Electrical power P_{BR} [W]	12	18
◦ Current at 120 °C I_{on} [A]	0.5	0.54
◦ Release delay time t_{BRH} [ms]	20	40
◦ Application delay time t_{BRL} [ms]	15	20

10.4.1 Dimensional drawing

- All figures in millimeters
- Illustration with J-winding

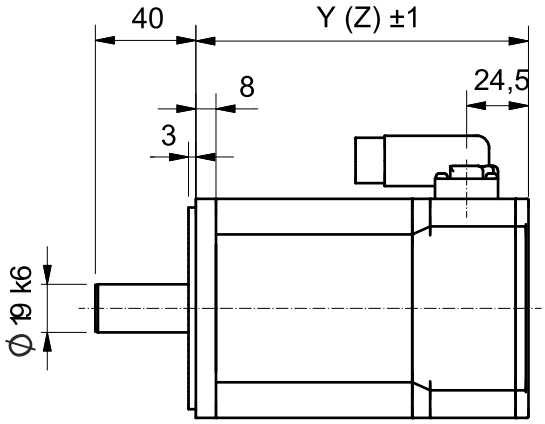

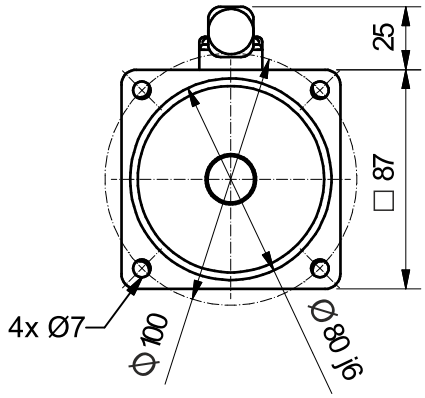

Motortype	Y	Z (Brake)
AM8141	132	179,5

Option: Feather key

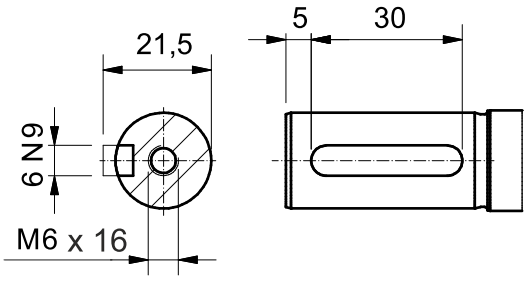

10.4.2 Dimensional drawing

- All figures in millimeters
- Illustration with N-winding

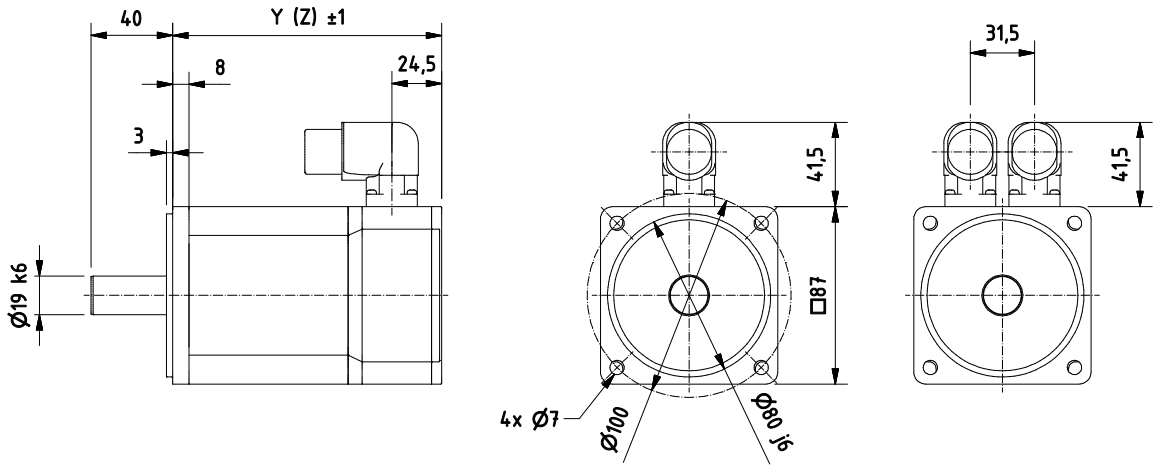

Motor	Y	Z - brake
AM8141	132	179.5
AM8142	162	209.5

Feather key [+]

- Center bore according to DIN 332-D

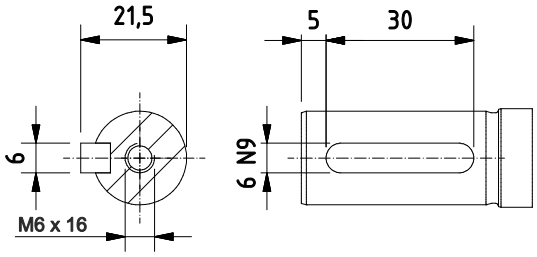

10.4.3 Force diagram

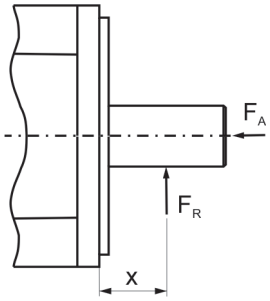

11 Appendix

11.1 Support and Service

Beckhoff and their partners around the world offer comprehensive support and service, making available fast and competent assistance with all questions related to Beckhoff products and system solutions.

Beckhoff's branch offices and representatives

Please contact your Beckhoff branch office or representative for local support and service on Beckhoff products!

The addresses of Beckhoff's branch offices and representatives round the world can be found on her internet pages:
http://www.beckhoff.com

You will also find further documentation for Beckhoff components there.

Beckhoff Headquarters

Beckhoff Automation GmbH & Co. KG

Huelshorstweg 20
33415 Verl
Germany

Phone:	+49(0)5246/963-0
Fax:	+49(0)5246/963-198
e-mail:	info@beckhoff.com

Beckhoff Support

Support offers you comprehensive technical assistance, helping you not only with the application of individual Beckhoff products, but also with other, wide-ranging services:

- support
- design, programming and commissioning of complex automation systems
- and extensive training program for Beckhoff system components

Hotline:	+49(0)5246/963-157
Fax:	+49(0)5246/963-9157
e-mail:	support@beckhoff.com

Beckhoff Service

The Beckhoff Service Center supports you in all matters of after-sales service:

- on-site service
- repair service
- spare parts service
- hotline service

Hotline:	+49(0)5246/963-460
Fax:	+49(0)5246/963-479
e-mail:	service@beckhoff.com

More Information:

Beckhoff Automation GmbH & Co. KG
Hülshorstweg 20
33415 Verl
Germany
Phone: +49 5246 9630
info@beckhoff.com
www.beckhoff.com